NOTE: COMPONENT MAYBE MANUFACTURED FROM MULTIPLE SECTIONS (4 MAXIMUM)
EACH SECTION MUST BE SECURED TO EACH OTHER TO MAINTAIN STRUCTURAL INTEGRITY

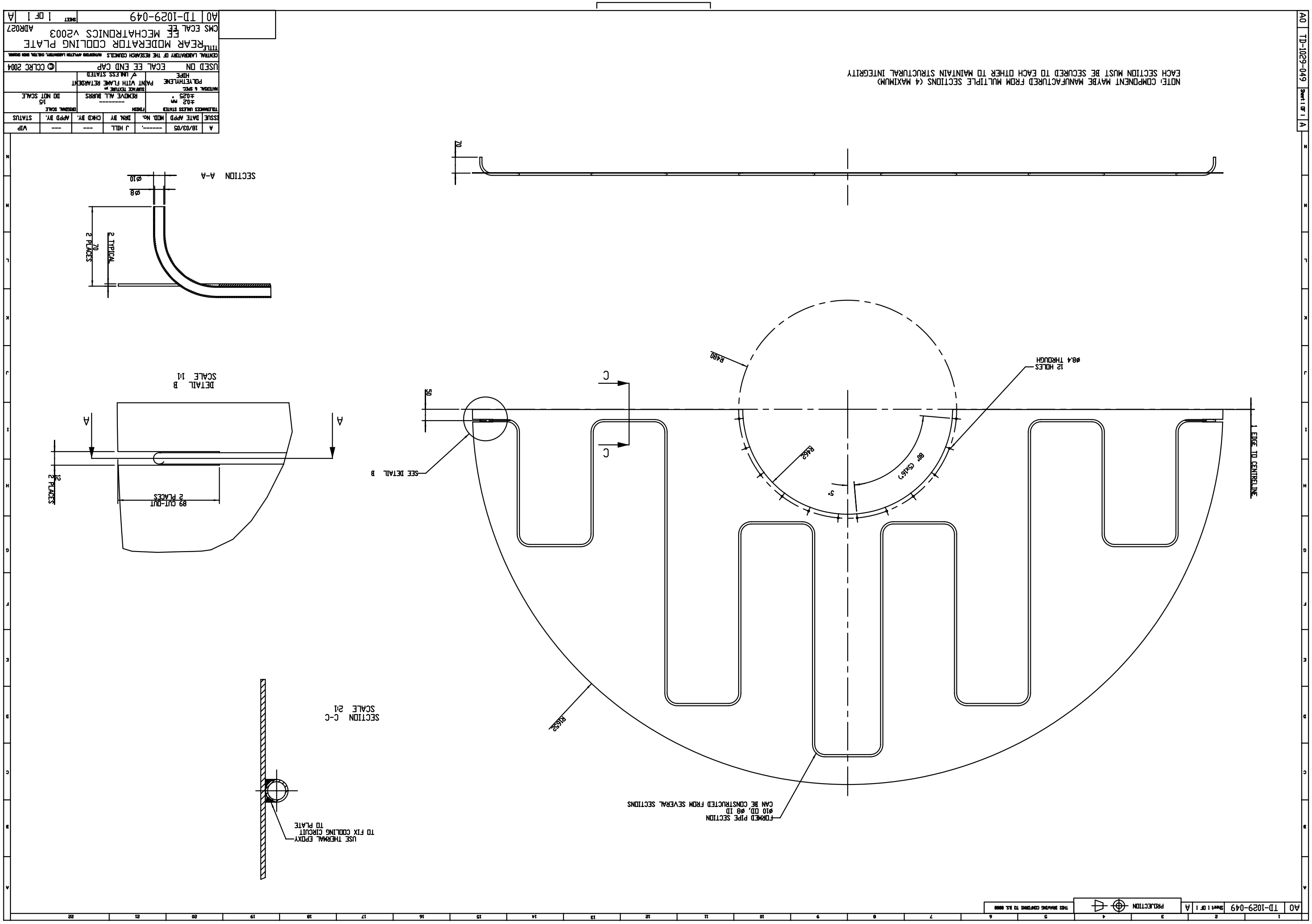

ISSUE	DATE APPD	MOD. No.	DRN. BY	CHKD BY.	APPD BY.	STATUS
A	18/03/05	-------,	J HILL	---	---	VIP

TOLERANCES UNLESS STATED	FINISH	ORIGINAL SCALE
±02 MM ±025 °	REMOVE ALL BURRS ----------	1:5 DO NOT SCALE

MATERIAL & SPEC	SURFACE TEXTURE µm
POLYETHYLENE HDPE	PAINT WITH FLAME RETARDENT √ UNLESS STATED

USED ON ECAL EE END CAP © CCLRC 2004

CENTRAL LABORATORY OF THE RESEARCH COUNCILS. ANALYSING APPLETON LABORATORY, CHILTON, DIDCOT, OXON.

TITLE REAR MODERATOR COOLING PLATE
EE MECHATRONICS v2003
CMS ECAL EE ADR027

A0	TD-1029-049	SHEET 1 OF 1	A

A0	TD-1029-049	Sheet 1 OF 1	A

A0	TD-1029-049	Sheet 1 OF 1	A	PROJECTION	THIS DRAWING CONFORMS TO B.S. 8888