A0 TD-1024-053

PROJECTION

THIS DRAWING CONFORMS TO B.S. 308

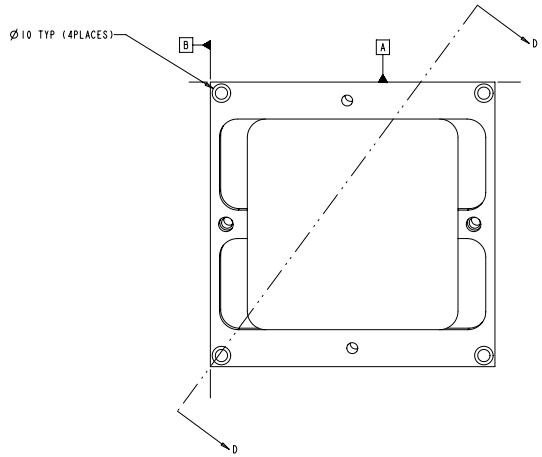

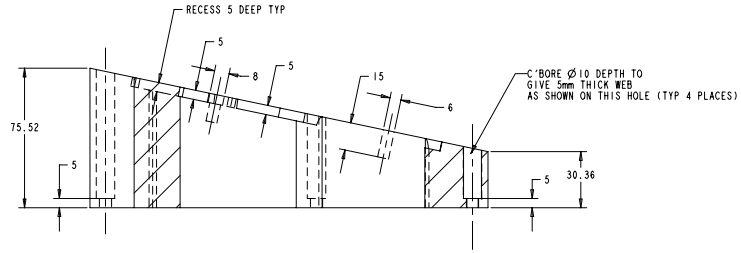

SECTION D-D

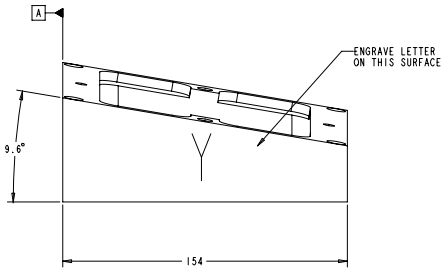

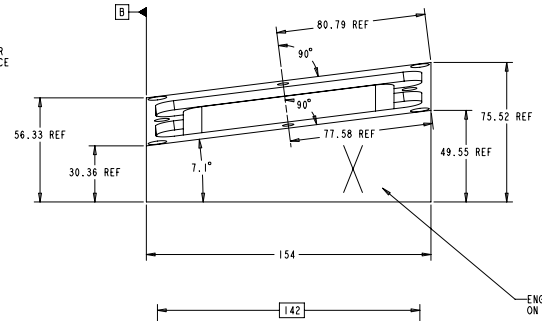

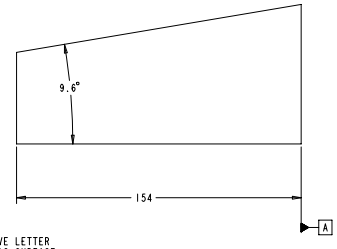

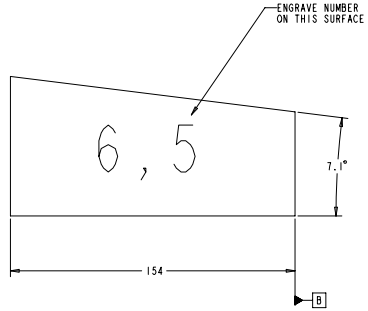

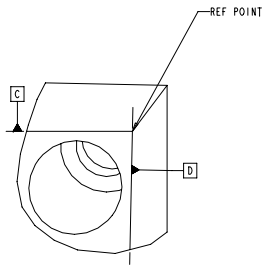

DETAIL K
SCALE 5.000

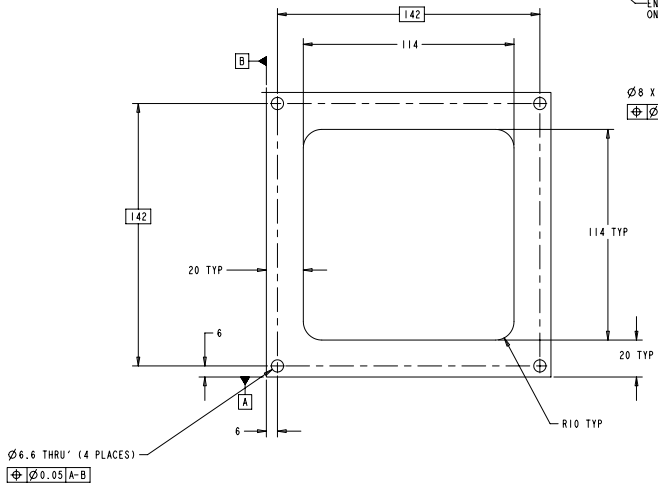

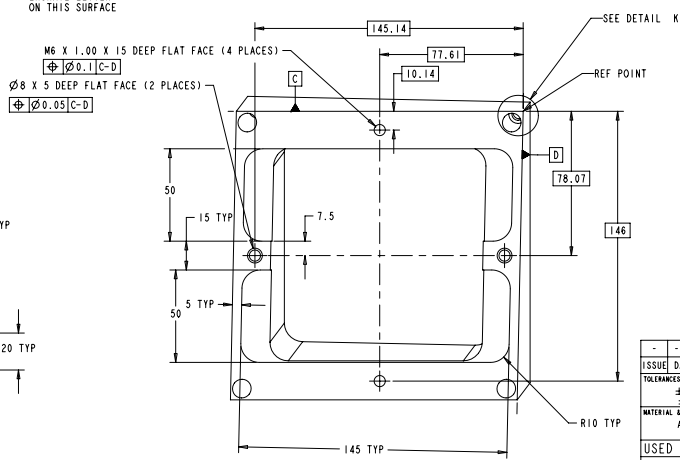

TRUE PROJECTION OF
ANGLED FACE

-	--/---/--	------.	V FRANCIS	---	---	WIP
ISSUE	DATE APPD	MOD. No.	DRN. BY	CHKD BY.	APPD BY.	STATUS

TOLERANCES UNLESS STATED ±0.100 mm ±0.050 "	FINISH CLEAN AN DEGREASE REMOVE ALL BURRS	ORIGINAL SCALE 1.000 DO NOT SCALE
MATERIAL & SPEC. ALUMINIUM ALLOY	SURFACE TEXTURE µM 1.6 ✓ UNLESS STATED	

USED ON TD-1024-003

© CLRC 2001

CENTRAL LABORATORY OF THE RESEARCH COUNCILS RUTHERFORD APPLETON LABORATORY, CHILTON, OXON OX11 0QX

TITLE **POSITIONAL SPACER 6,5**

CMS ECAL EE ------

A0 TD-1024-053 SHEET 1 OF 1 -

A0 TD-1024-053