36/RL/821

1R 124970

PROJECTION — THIS DRAWING CONFORMS TO B.S.308

ITEM No.	DRG. No. CAT. No.	NAME	No OFF	REMARKS
1	THIS	BEAM	1	MILD STEEL BS 4360 GDE43C
2	THIS	TRUNNION	1	MILD STEEL
3	THIS	BASE PLATE	2	BS. 4360
4	THIS	SIDE PLATE - END	4	GDE 43A
5	THIS	SIDE PLATE	2	
C 6	THIS	CLOSING PLATE	2	

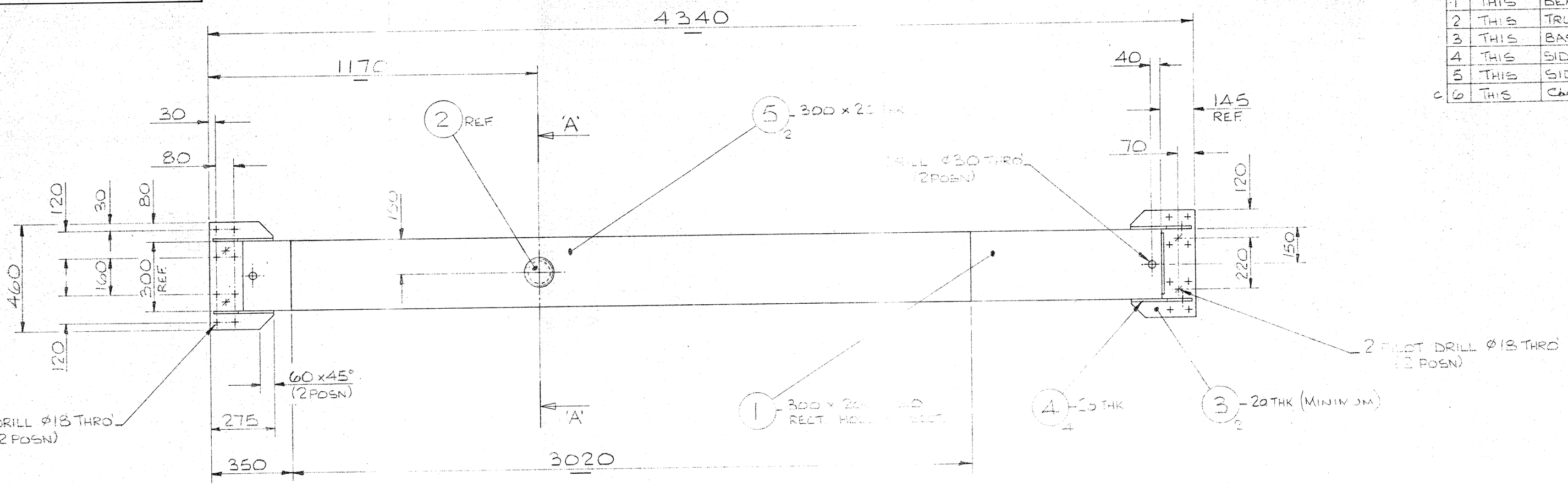

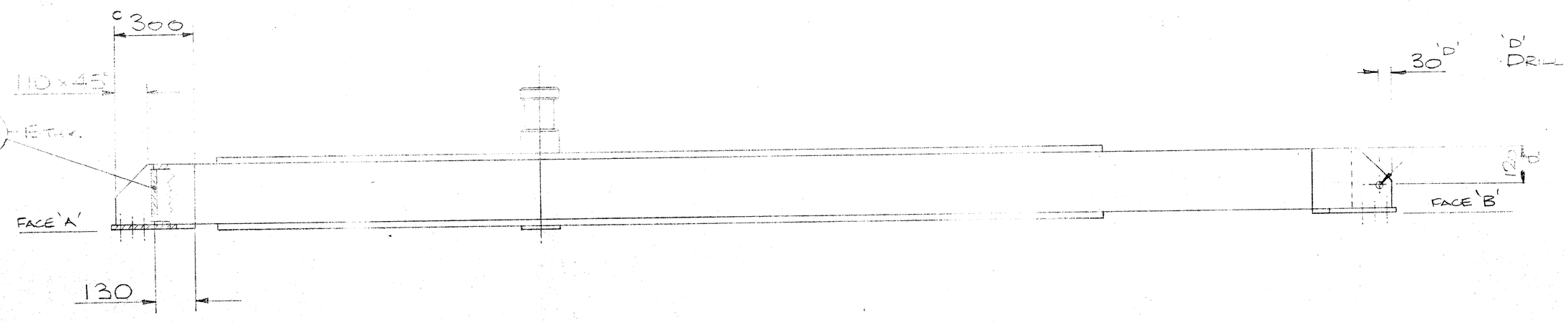

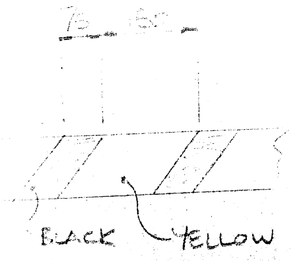

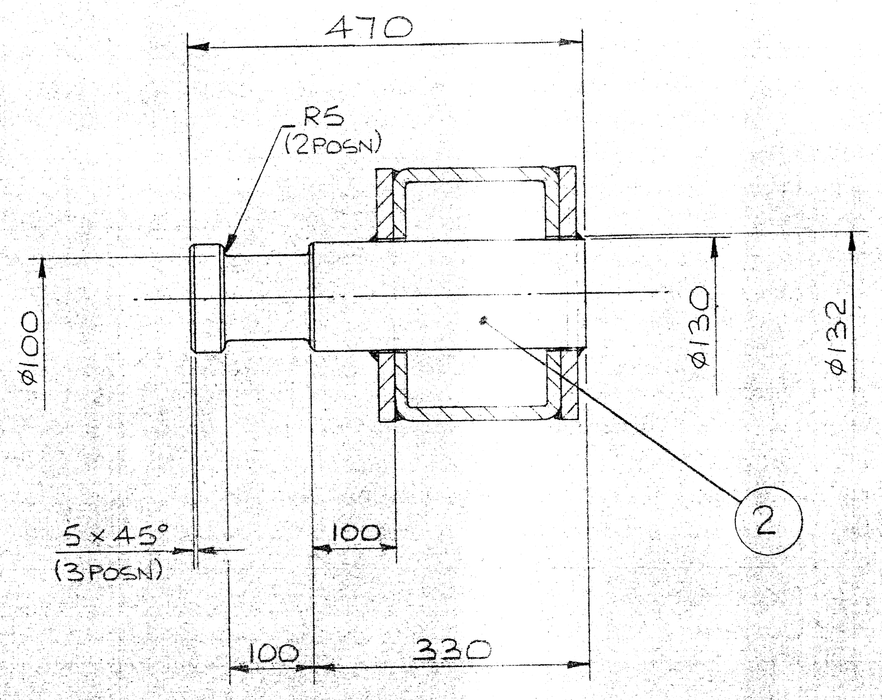

SECTION 'A-A'
SCALE:- 1:5

NOTES

1. ALL WELDED CONSTRUCTION.
2. BEAM TO BE PAINTED YELLOW WITH BLACK DIAGONAL STRIPES (SEE SKETCH). DO NOT PAINT FACES 'A' & 'B'.
3. FACES 'A' & 'B' TO BE MACHINED IN SAME PLANE.

ESTIMATED WEIGHT = 850 Kg

ISSUE	DATE	MOD. No.
D	17/2/87	20 DIA LIFTING HOLE ADDED. ALTERATIONS MARKED 'D'
C	14.8.86	ITEM 6 ADDED. PAINTING NOTE MODIFIED. AT E3 300 DIM WAS 260. ITEM 3 WAS 15 THICK. ITEM 4 WAS 12.5 THICK. ALL ALTERATIONS MARKED C
B	2/12/85	
A	26/2/85	

USED ON OR 125000

MATERIAL & SPEC.	TOLERANCES UNLESS STATED	DRN M.G. MARSHALL	CHKD	APPD
SEE ITEMS LIST	GEN. - ±1	FINISH: SEE NOTE 2	SURFACE TEXTURE µm: ✓ UNLESS STATED	
REMOVE ALL BURRS	HOLE CRS. - ±0.3	ORIGINAL SCALE 1:10	0 — 500 mm. INCHES	

1R 124970

JOB No. | PROJ. No.

Science & Engineering Research Council — RUTHERFORD APPLETON LABORATORY, CHILTON, OXON.

TITLE: ROTATION BEAM FRONT END GLASS ARRAY MOUNTING FRAME - OPAL

CONTR'S REF: TECHWORK AR 2192

1R 124970

5568M

OZALID (UK) LTD.